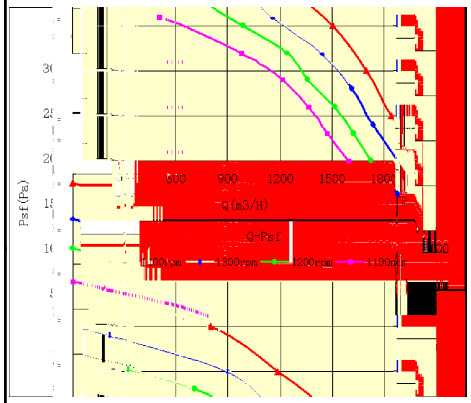
Pst(Pa)
30
25
20
15
10
5
0
600
900
1200
1500
1800
Q(m3/H)
Q-Pst
1400rpm
1300rpm
1200rpm
1100rpm

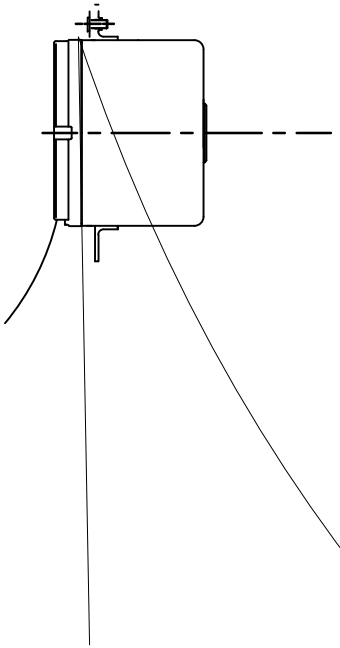

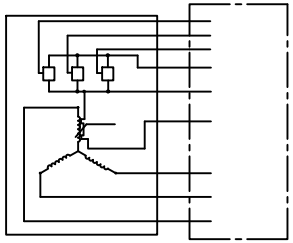

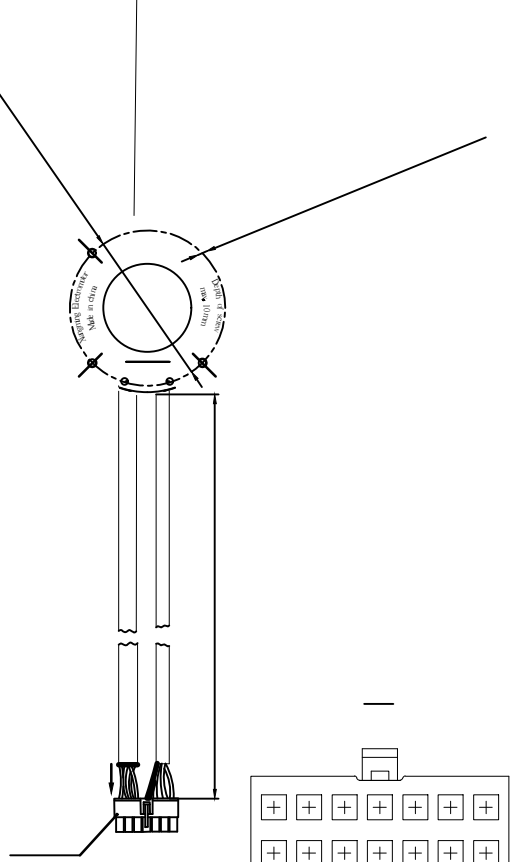
Depth of Screw
max 10mm
Max in Diameter
Max in Grip
Max in Diameter

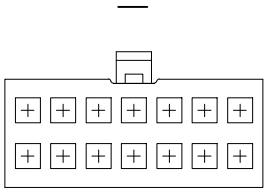

| | | | |
|---|---|---|---|
| | | | |
| | | | |
| | | | |
| | | | |
| | | | |
| | | | |
| | | | |
| | | | |
| | | | |
| | | | |
| | | | |

| | | | | | |
|---|---|---|---|---|---|
| | | | | | |
| | | | | | |
| | | | | | |
| | | | | | |
| | | | | | |
| | | | | | |
| | | | | | |
| | | | | | |
| | | | | | |
| | | | | | |
| | | | | | |